MEET INTERNATIONAL STANDARD API5B

# EXTERNAL THREAD TAPER MEASURING INSTRUMENTS

- Measure the taper of external thread
- Dial indicator stroke .5"
- Dial indicator graduation .001"
- Optional accessory: ball points (part no. **6252** series)

**2230-10**

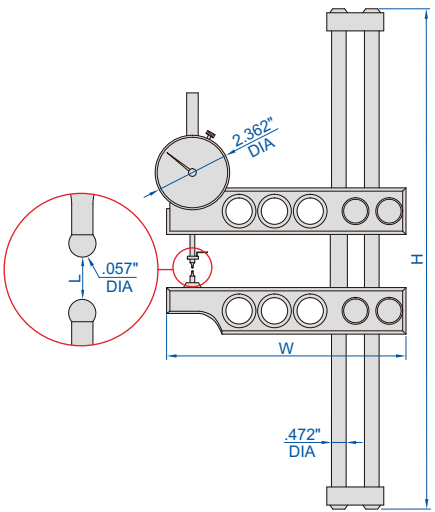


principle of measurement

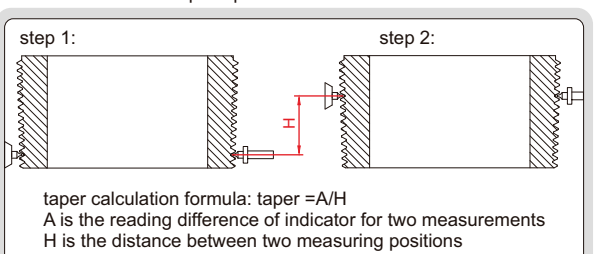


| Part No. | Range (L) | Accuracy | H | W |
|---|---|---|---|---|
| **2230-10** | 0-10"/0-254mm | .0015" | 15.748" | 7.874" |
| **2230-45** | 1-4 1/2"/25.4-114.3mm | .0015" | 10.945" | 7.008" |
| **2230-16** | 1-16"/25.4-406.4mm | .0015" | 23.622" | 10.236" |
| **2230-20** | 1-20"/25.4-508mm | .0015" | 26.772" | 10.236" |